Technical characteristics | ScreenZip cassette blinds

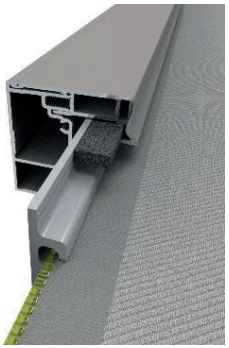

ScreenZip 110	ScreenZip 120	ScreenZip 150
Maximum width: 4000 mm	Maximum width: 5000 mm	Maximum width: 6000 mm
Maximum heigth: 3500 mm	Maximum heigth: 4000 mm	Maximum heigth: 4000 mm

Roller box

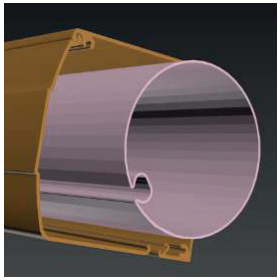

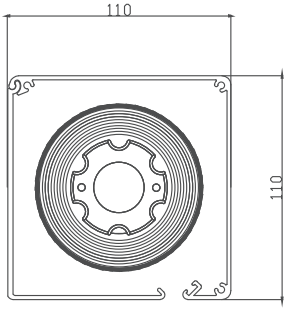

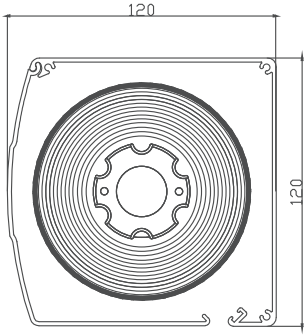

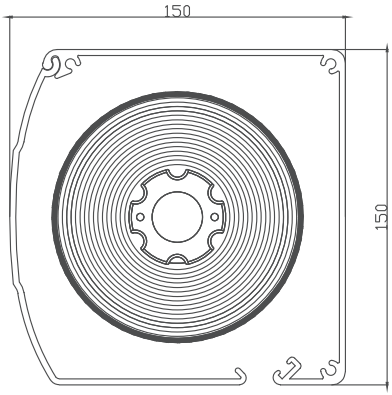

Guide

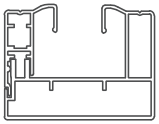

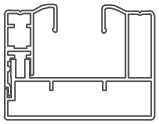

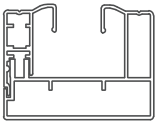
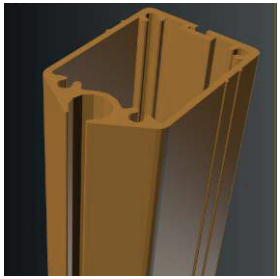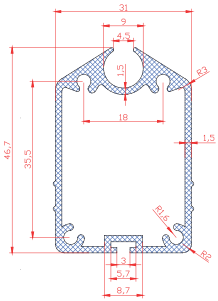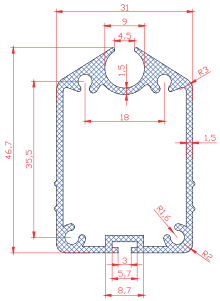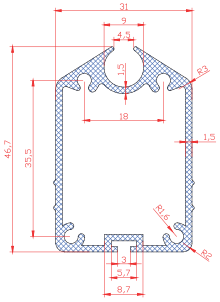
Terminal